TS393

Micropower Dual CMOS Voltage Comparators

- Extremely low supply current: **9µa typ/comp.**
- Wide single supply range **2.7V to 16V** or dual supplies (±1.35V to ±8V)
- Extremely low input bias current: **1pA typ.**
- Extremely low input offset current: **1pA typ.**
- Input common-mode voltage range includes GND
- High input impedance: $10^{12}\Omega$ typ
- Fast response time: 2.5µs typ. for 5mV overdrive
- Pin-to-pin and functionally compatible with bipolar LM393

N
DIP8
(Plastic Package)

D
SO-8
(Plastic Micropackage)

P
TSSOP8
(Thin Shrink Small Outline Package)

Description

The TS393 is a micropower CMOS dual voltage comparator with extremely low consumption of 9µA typ / comparator (20 times less than bipolar LM339). Similar performances are offered by the quad micropower comparator TS3702 with a push-pull CMOS output.

Thus response times remain similar to the LM393.

Pin Connection (top view)

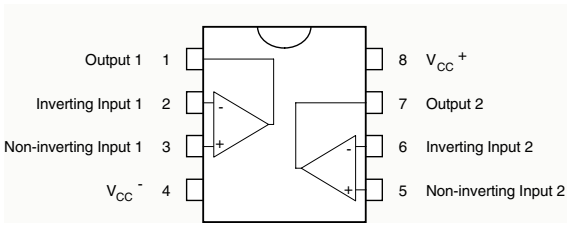

Order Codes

Part Number	Temperature Range	Package	Packaging	Marking
TS393CN	0°C, +70°C	DIP84	Tube	TS393CN
TS393CD/CDT		SO-8	Tube or Tape & Reel	S399C
TS393MD/MDT	-55°C, +125°C	SO-8	Tube or Tape & Reel	S393M
TS393IN	-40°C, +125°C	DIP8	Tube	TS393IN
TS393ID/IDT		SO-8	Tube or Tape & Reel	S393I
TS393IPT		TSSOP8 (Thin Shrink Outline Package)	Tape & Reel	S393I
TS393IYD/IYDT	-40°C, +125°C	SO-8 (automotive grade level)	Tube or Tape & Reel	S393IY

1 Absolute Maximum Ratings

Table 1. Key parameters and their absolute maximum ratings

Symbol	Parameter	Value	Unit
V_{CC}^+	Supply Voltage (1)	18	V
V_{id}	Differential Input Voltage (2)	±18	V
V_i	Input Voltage (3)	18	V
V_o	Output Voltage	18	V
I_o	Output Current	20	mA
I_F	Forward Current in ESD Protection Diodes on Inputs (4)	50	mA
p_d	Power Dissipation (5) DIP8 SO8 TSSOP8	1250 710 625	mW
T_{stg}	Storage Temperature Range	-65 to +150	°C
ESD	HBM: Human Body Model(6)	50	V
	MM: Machine Model(7)	40	V
	CDM: Charged Device Model	1	kV

1. All voltage values, except differential voltage, are with respect to network ground terminal.
2. Differential voltages are the non-inverting input terminal with respect to the inverting input terminal.
3. Excursions of input voltages may exceed the power supply level. As long as the common mode voltage [$V_{icm}=(V_{in}^+ + V_{in}^-)/2$] remains within the specified range, the comparator will provide a stable output state. However, the maximum current through the ESD diodes (IF) of the input stage must strictly be observed.
4. Guaranteed by design.
5. Pd is calculated with T_{amb} = +25°C, T_j = +150°C and R_{thja} = 80 °C/W for DIP14 package
   = 150 °C/W for SO14 package
   = 175°C/W for TSSOP14 package
6. Human body model, 100pF discharged through a 1.5kΩ resistor into pin of device.
7. Machine model ESD, a 200pF cap is charged to the specified voltage, then discharged directly into the IC with no external series resistor (internal resistor < 5Ω), into pin to pin of device.

Table 2. Operating conditions

Symbol	Parameter	Value	Unit
V_{CC}^+	Supply Voltage TS393C,I TS393M	 2.7 to 16 4 to 16	V
V_{icm}	Common Mode Input Voltage Range	0 to V_{CC}^+ -1.5	V
T_{oper}	Operating Free-Air Temperature range TS393C TS393I TS393M	 0 to +70 -40 to +125 -55 to +125	°C

2 Typical Application Schematics

Figure 1. Schematic diagram (for 1/2 TS393)

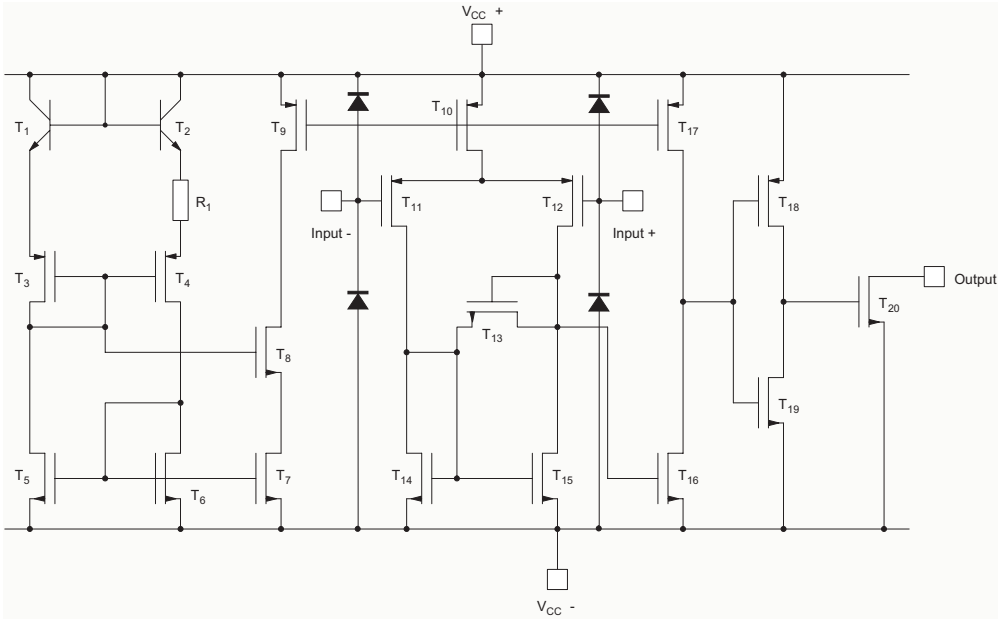

3 Electrical Characteristics

Table 3. V_{CC}^+ = 3V, V_{CC}^- = 0V, T_{amb} = 25°C (unless otherwise specified)

Symbol	Parameter	Min.	Typ.	Max.	Unit
V_{io}	Input Offset Voltage (1) V_{ic} = 1.5V $T_{min.} \leq T_{amb} \leq T_{max.}$			5 6.5	mV
I_{io}	Input Offset Current (2) V_{ic} = 1.5V $T_{min.} \leq T_{amb} \leq T_{max.}$		1	 300	pA
I_{ib}	Input Bias Current 2) V_{ic} = 1.5V $T_{min.} \leq T_{amb} \leq T_{max.}$		1	 600	pA
V_{icm}	Input Common Mode Voltage Range $T_{min.} \leq T_{amb} \leq T_{max}$	0 0		V_{CC}^+-1.2 V_{CC}^+ -1.5	V
CMR	Common-mode Rejection Ratio $V_{ic} = V_{icm\ min.}$		70		dB
SVR	Supply Voltage Rejection Ratio V_{CC}^+ = 3V to 5V		70		dB
I_{OH}	High Level Output Current V_{id} = +1V, V_{OH} = 3V $T_{min.} \leq T_{amb} \leq T_{max.}$		2	40 1000	nA
V_{OL}	Low Level Output Voltage V_{id} = -1V, I_{OL} = +6mA $T_{min.} \leq T_{amb} \leq T_{max.}$		400	550 800	mV
I_{CC}	Supply Current (each comparator) No load - Outputs low $T_{min.} \leq T_{amb} \leq T_{max.}$		9	20 25	µA
t_{PLH}	Response Time Low to High V_{ic} = 0V, f = 10kHz, R_L = 5.1kΩ, C_L = 50pF, Overdrive = 5mV TTL Input		1.5 0.7		µs
t_{PHL}	Response Time High to Low V_{ic} = 0V, f = 10kHz, R_L = 5.1kΩ, C_L = 50pF, Overdrive = 5mV TTL Input		2.5 0.08		µs

1. The specified offset voltage is the maximum value required to drive the output up to 2.5V or down to 0.3V.
2. Maximum values including unavoidable inaccuracies of the industrial test.

Table 4. V_{CC}^+ = 5V, V_{CC}^- = 0V, T_{amb} = 25°C (unless otherwise specified)

Symbol	Parameter	Min.	Typ.	Max.	Unit
V_{io}	Input Offset Voltage (1) V_{ic} = 2.5V, V_{cc}^+ = 5V to 10V $T_{min.} \le T_{amb} \le T_{max.}$		1.4	5 6.5	mV
I_{io}	Input Offset Current (2) V_{ic} = 2.5V $T_{min.} \le T_{amb} \le T_{max.}$		1	 300	pA
I_{ib}	Input Bias Current 2) V_{ic} = 2.5V $T_{min.} \le T_{amb} \le T_{max.}$		1	 600	pA
V_{icm}	Input Common Mode Voltage Range $T_{min.} \le T_{amb} \le T_{max}$	0 0		V_{CC}^+-1.2 V_{CC}^+ -1.5	V
CMR	Common-mode Rejection Ratio V_{ic} = 0V		71		dB
SVR	Supply Voltage Rejection Ratio V_{CC}^+ = +5V to +10V		80		dB
I_{OH}	High Level Output Voltage V_{id} = 1V, V_{OH} = +5V $T_{min.} \le T_{amb} \le T_{max.}$		2	40 1000	nA
V_{OL}	Low Level Output Voltage V_{id} = -1V, I_{OL} = 6mA $T_{min.} \le T_{amb} \le T_{max.}$		260	400 650	mV
I_{CC}	Supply Current (each comparator) No load - Outputs low $T_{min.} \le T_{amb} \le T_{max.}$		10	20 25	µA
t_{PLH}	Response Time Low to High V_{ic} = 0V, f = 10kHz, R_L = 5.1kΩ, C_L = 50pF, Overdrive = 5mV Overdrive = 10mV Overdrive = 20mV Overdrive = 40mV TTL Input		 1.5 1.2 1.0 0.8 0.7		µs
t_{PHL}	Response Time High to Low V_{ic} = 0V, f = 10kHz, R_L = 5.1kΩ, C_L = 50pF, Overdrive = 5mV Overdrive = 10mV Overdrive = 20mV Overdrive = 40mV TTL Input		 2.5 1.9 1.2 0.8 0.08		µs
t_f	Fall time f = 10kHz, C_L = 50pF, R_L = 5.1kΩ, Overdrive 50mV		25		as

1. The specified offset voltage is the maximum value required to drive the output up to 4.5V or down to 0.3V.
2. Maximum values including unavoidable inaccuracies of the industrial test.

4 Package Mechanical Data

In order to meet environmental requirements, ST offers these devices in ECOPACK® packages. These packages have a Lead-free second level interconnect. The category of second level interconnect is marked on the package and on the inner box label, in compliance with JEDEC Standard JESD97. The maximum ratings related to soldering conditions are also marked on the inner box label. ECOPACK is an ST trademark. ECOPACK specifications are available at: www.st.com.

4.1 DIP8 Package

Plastic DIP-8 MECHANICAL DATA

DIM.	mm.			inch		
	MIN.	TYP	MAX.	MIN.	TYP.	MAX.
A		3.3			0.130	
a1	0.7			0.028		
B	1.39		1.65	0.055		0.065
B1	0.91		1.04	0.036		0.041
b		0.5			0.020	
b1	0.38		0.5	0.015		0.020
D			9.8			0.386
E		8.8			0.346	
e		2.54			0.100	
e3		7.62			0.300	
e4		7.62			0.300	
F			7.1			0.280
I			4.8			0.189
L		3.3			0.130	
Z	0.44		1.6	0.017		0.063

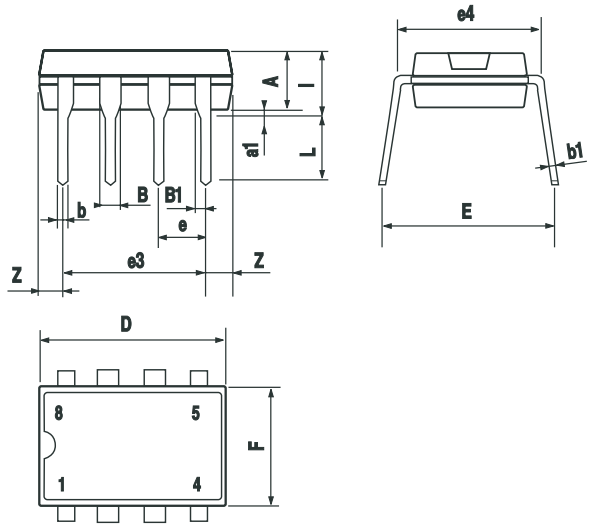

P001F

4.2 SO-8 Package

SO-8 MECHANICAL DATA

DIM.	mm.			inch		
	MIN.	TYP	MAX.	MIN.	TYP.	MAX.
A	1.35		1.75	0.053		0.069
A1	0.10		0.25	0.04		0.010
A2	1.10		1.65	0.043		0.065
B	0.33		0.51	0.013		0.020
C	0.19		0.25	0.007		0.010
D	4.80		5.00	0.189		0.197
E	3.80		4.00	0.150		0.157
e		1.27			0.050	
H	5.80		6.20	0.228		0.244
h	0.25		0.50	0.010		0.020
L	0.40		1.27	0.016		0.050
k	8° (max.)					
ddd			0.1			0.04

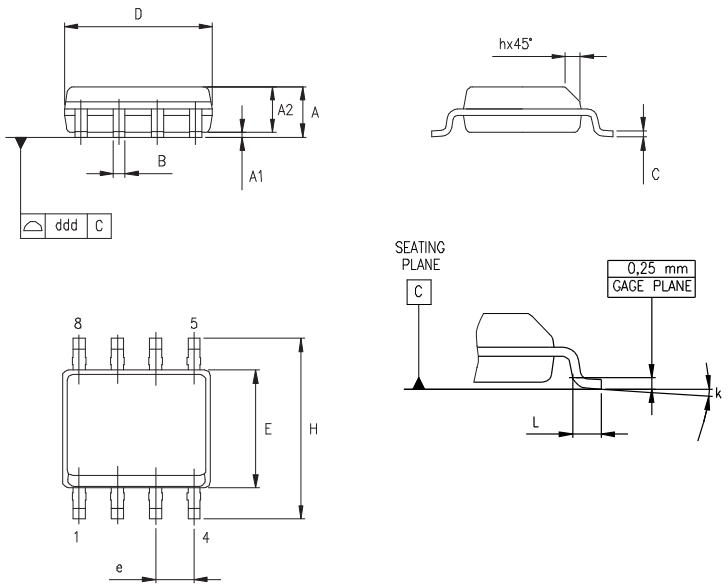

0016023/C

4.3 TSSOP8 Package

TSSOP8 MECHANICAL DATA

DIM.	mm.			inch		
	MIN.	TYP	MAX.	MIN.	TYP.	MAX.
A			1.2			0.047
A1	0.05		0.15	0.002		0.006
A2	0.80	1.00	1.05	0.031	0.039	0.041
b	0.19		0.30	0.007		0.012
c	0.09		0.20	0.004		0.008
D	2.90	3.00	3.10	0.114	0.118	0.122
E	6.20	6.40	6.60	0.244	0.252	0.260
E1	4.30	4.40	4.50	0.169	0.173	0.177
e		0.65			0.0256	
K	0˚		8˚	0˚		8˚
L	0.45	0.60	0.75	0.018	0.024	0.030
L1		1			0.039	

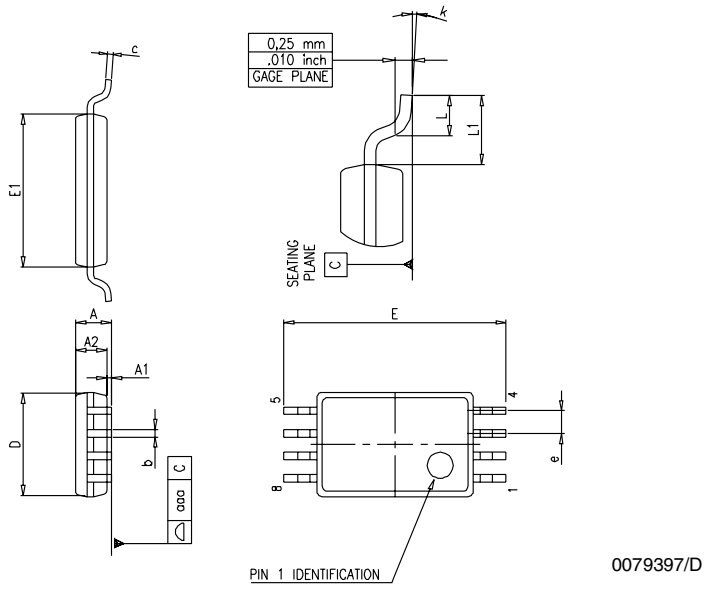

5 Revision History

Date	Revision	Changes
Jan. 2003	1	Initial release.
July 2005	2	1 - PPAP references inserted in the datasheet see *Table : Order Codes on page 1*. 2 - ESD protection inserted in *Table 1: Key parameters and their absolute maximum ratings on page 2*.

Information furnished is believed to be accurate and reliable. However, STMicroelectronics assumes no responsibility for the consequences of use of such information nor for any infringement of patents or other rights of third parties which may result from its use. No license is granted by implication or otherwise under any patent or patent rights of STMicroelectronics. Specifications mentioned in this publication are subject to change without notice. This publication supersedes and replaces all information previously supplied. STMicroelectronics products are not authorized for use as critical components in life support devices or systems without express written approval of STMicroelectronics.

The ST logo is a registered trademark of STMicroelectronics.
All other names are the property of their respective owners

© 2005 STMicroelectronics - All rights reserved

STMicroelectronics group of companies

Australia - Belgium - Brazil - Canada - China - Czech Republic - Finland - France - Germany - Hong Kong - India - Israel - Italy - Japan - Malaysia - Malta - Morocco - Singapore - Spain - Sweden - Switzerland - United Kingdom - United States of America

www.st.com